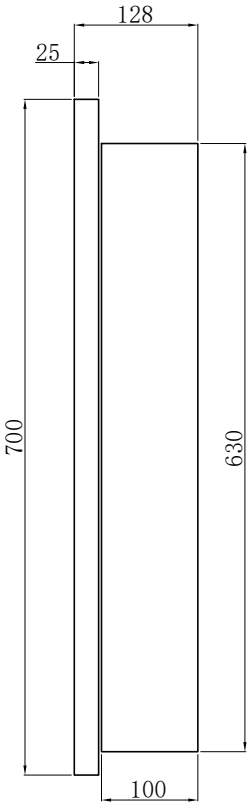
128
25
700
630
100

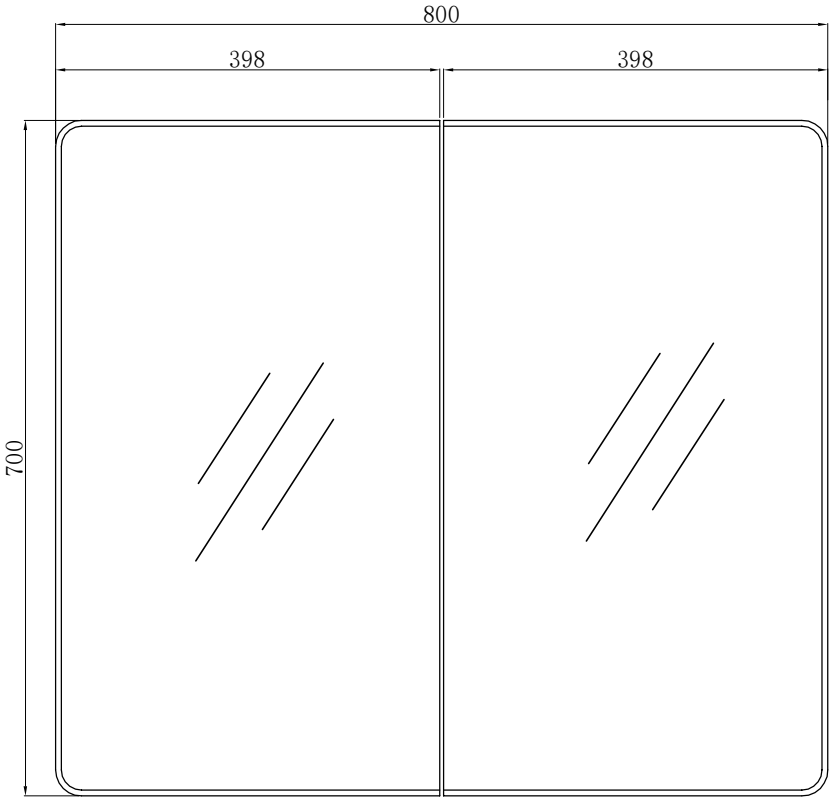
800
398
398
700

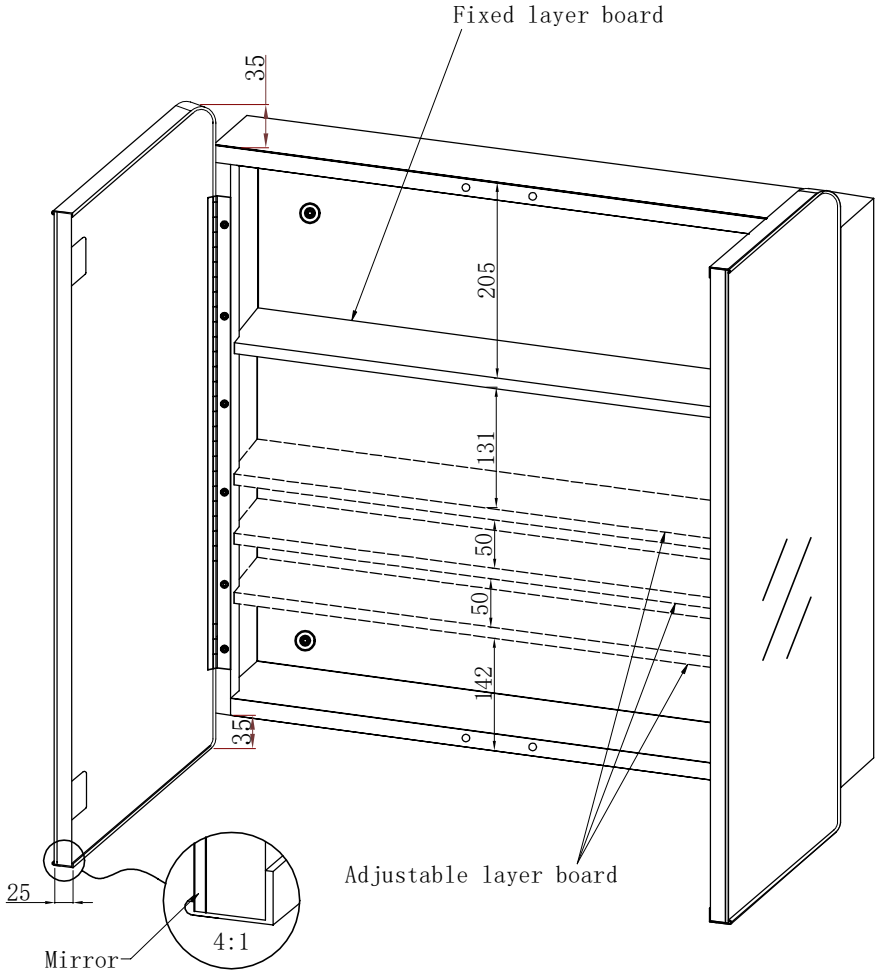
Fixed layer board
35
205
131
50
50
142
35
25
Mirror
4:1
Adjustable layer board