Harwich II

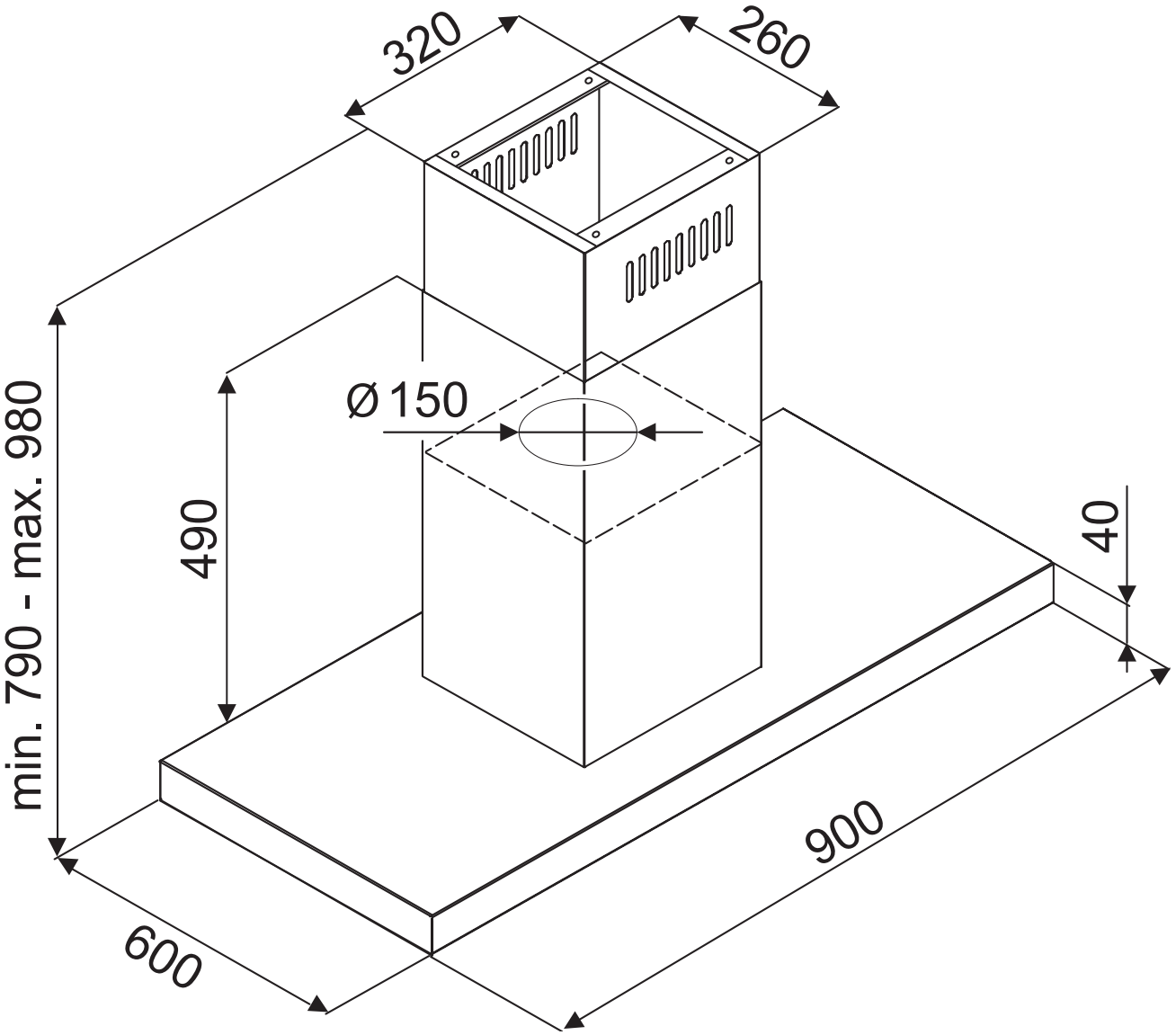

Revisionsdato: 29.10.2021